Schematic Diagram – Model RD-9844 Ⓐ

TR1 & TR2 **2SC828** ASTABLE MALTI
D1 **0A90** WAVE SHAPER
TR3 & TR4 **2SC828** FLIP FLOP 1
TR5 & TR6 **2SC828** FLIP FLOP 2
TR7 & TR8 **2SC828** FLIP FLOP 3
TR9 & TR10 **2SC828** FLIP FLOP 4
D2 **RVDMZ206** REGULATOR

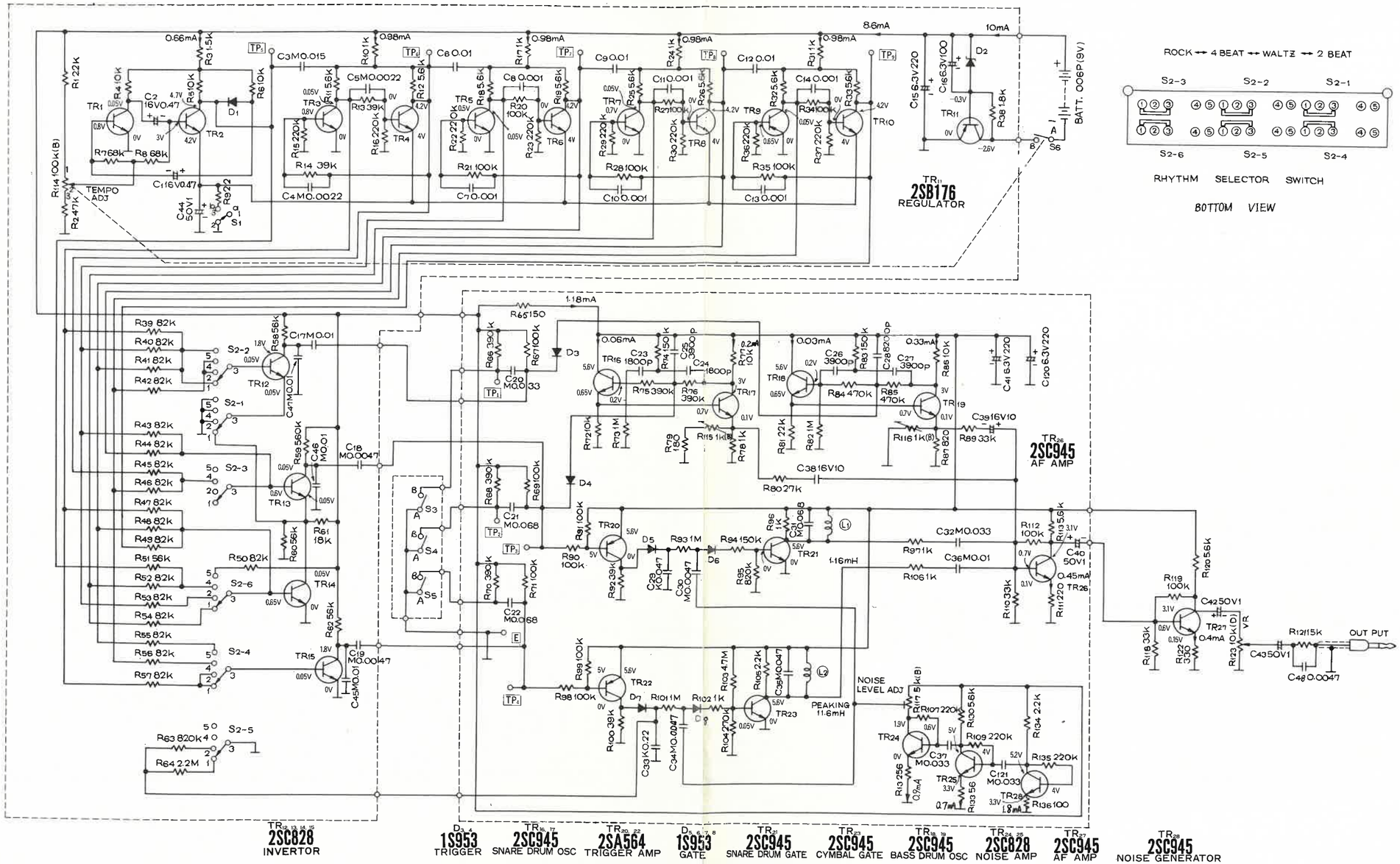

TR12, 13, 14, 15 **2SC828** INVERTOR
D3, 4 **1S953** TRIGGER
TR16, 17 **2SC945** SNARE DRUM OSC
TR20, 22 **2SA564** TRIGGER AMP
D5, 6, 7, 8 **1S953** GATE
TR21 **2SC945** SNARE DRUM GATE
TR23 **2SC945** CYMBAL GATE
TR24, 25 **2SC945** BASS DRUM OSC
TR28, 29 **2SC828** NOISE AMP
TR27 **2SC945** AF AMP
TR28 **2SC945** NOISE GENERATOR

C	2 1 44 3 4 5 6 7 8 9 10 23 11 25 24 12 13 14 28 27 15 16 41 120
	47 17 46 18 19 45 20 21 22 29 33 30 34 35 31 38 32 26 36 37 39 121 40 42 43 48
R	114 1 2 7 4 8 3 5 9 10 15 14 11 13 10 16 12 22 21 18 20 17 23 19 29 28 25 27 24 30 26 36 35 32 34 31 37 33 117 116 38
	39 40 41 42 43 44 45 46 47 50 58 60 59 61 66 68 65 67 69 90 91 72 73 92 75 74 76 79 115 77 78 94 95 96 81 80 82 84 83 85 88 97 106 107 89 87 110 112 109 113 111 118 119 120 122 123 121
	48 49 51 52 53 54 55 56 57 63 64 62 70 71 98 99 100 93 101 102 103 104 105 132 130 133 134 135 136

Notes:

1. S_1: Manual-Auto selector switch in "AUTO" position.
2. $S_{2-1} \sim S_{2-6}$: Rhythm selector switch in "ROCK" position.
3. S_3: Bass drum switch.
4. S_4: Snare drum switch.
5. S_5: Cymbal switch.
6. S_6: Power switch in "OFF" position.
7. DC voltage measurements are taken with circuit tester 10KΩ/V from negative terminal of battery.